AUTOCAR®

XPEDITOR
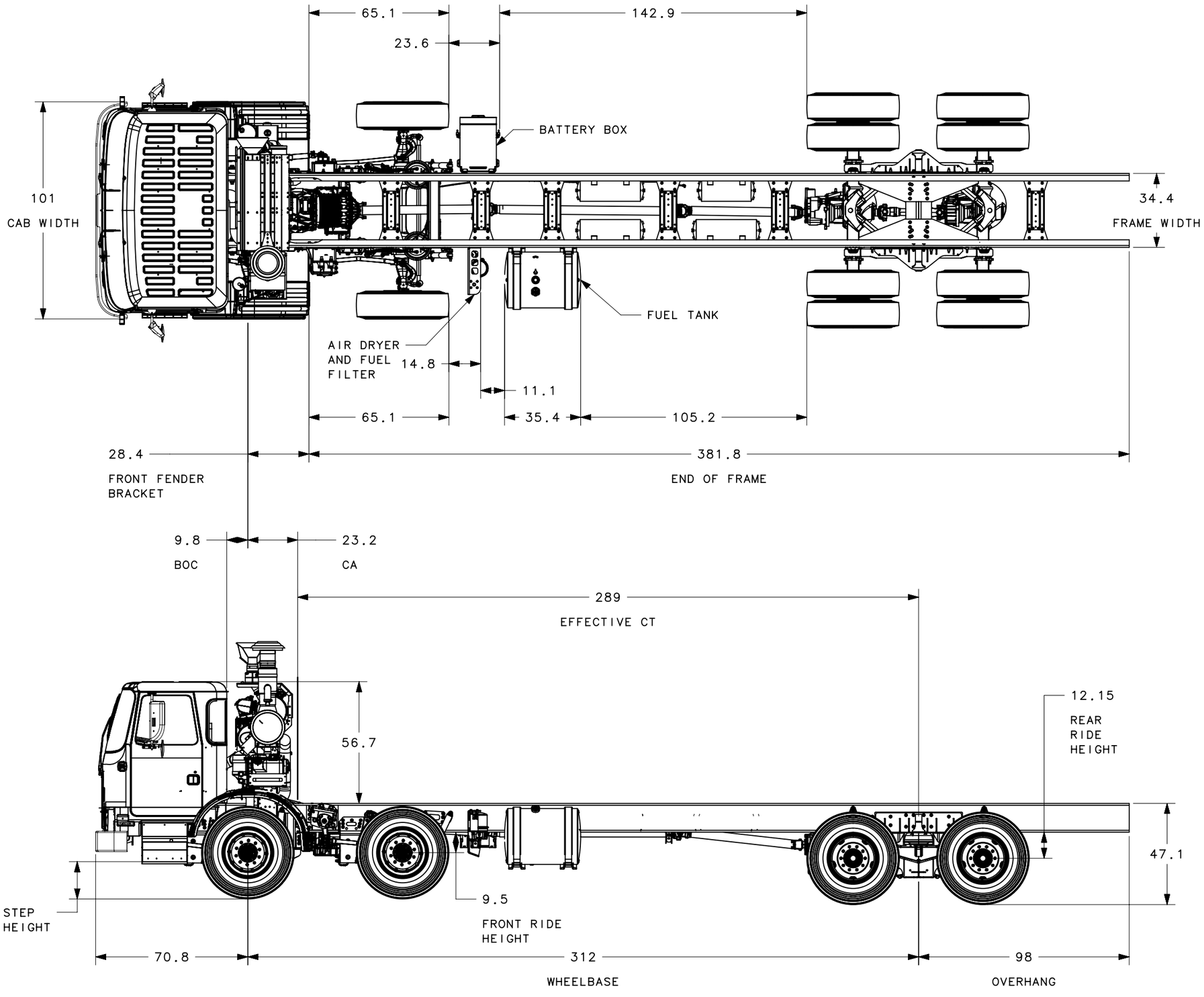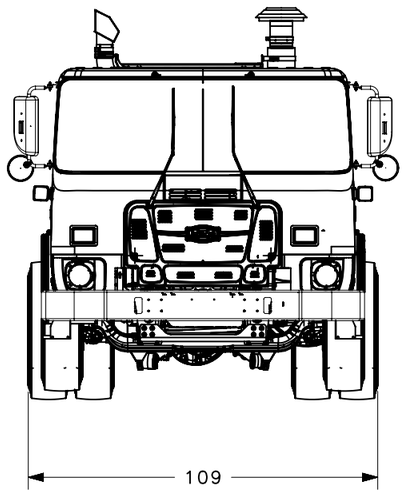
ACX 8X4 TYPICAL
CUMMINS ISX ENGINE
ALLISON 4500 TRANSMISSION
MERITOR TANDEM 40K STEER AXLE
ARVIN MERITOR RT70-380 REAR AXLE
CHALMERS 70K REAR SUSPENSION
312" WHEELBASE
98" OVERHANG
ALL DIMENSIONS IN INCHES